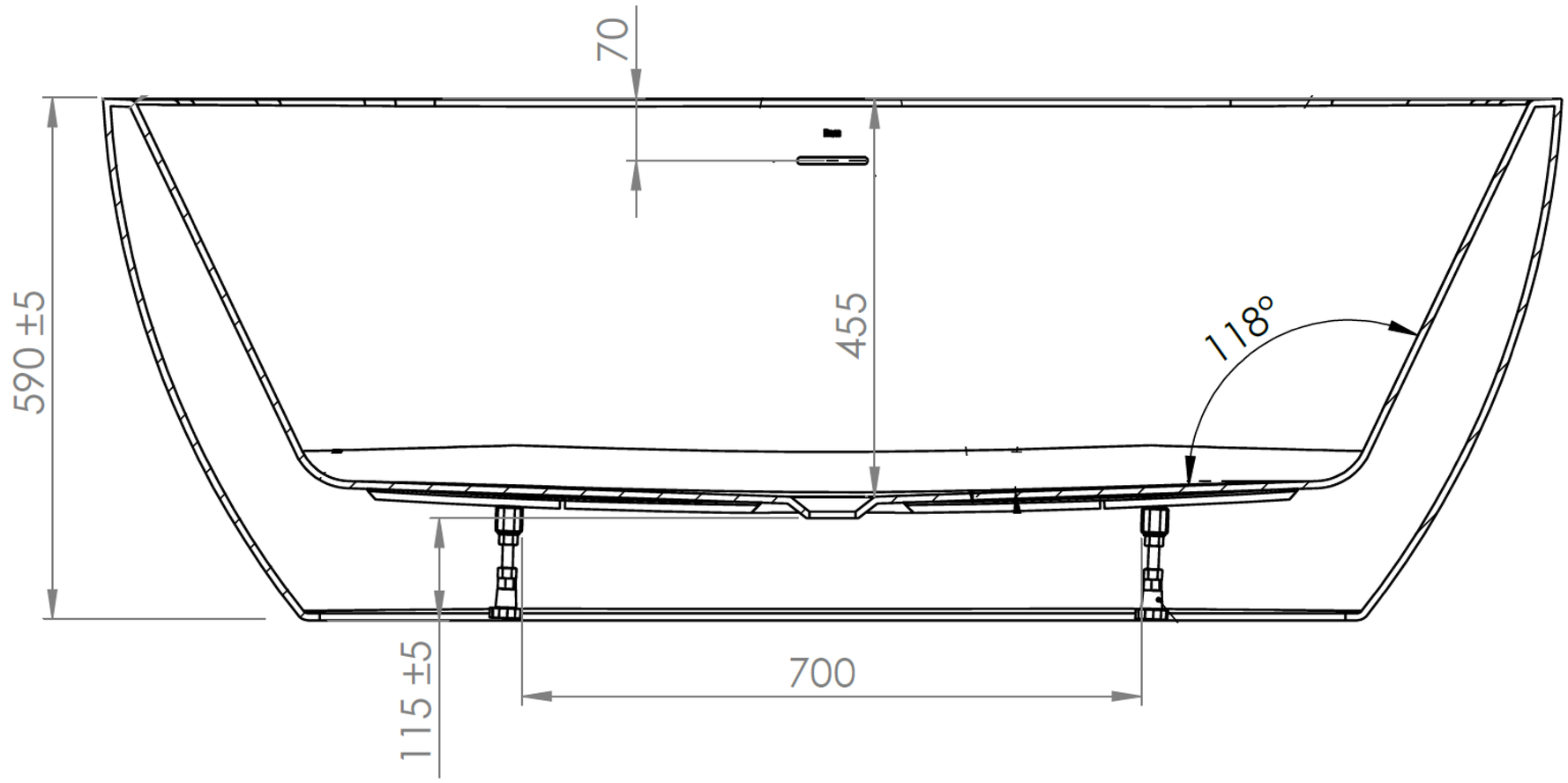
70
590 ±5
455
118°
115 ±5
700

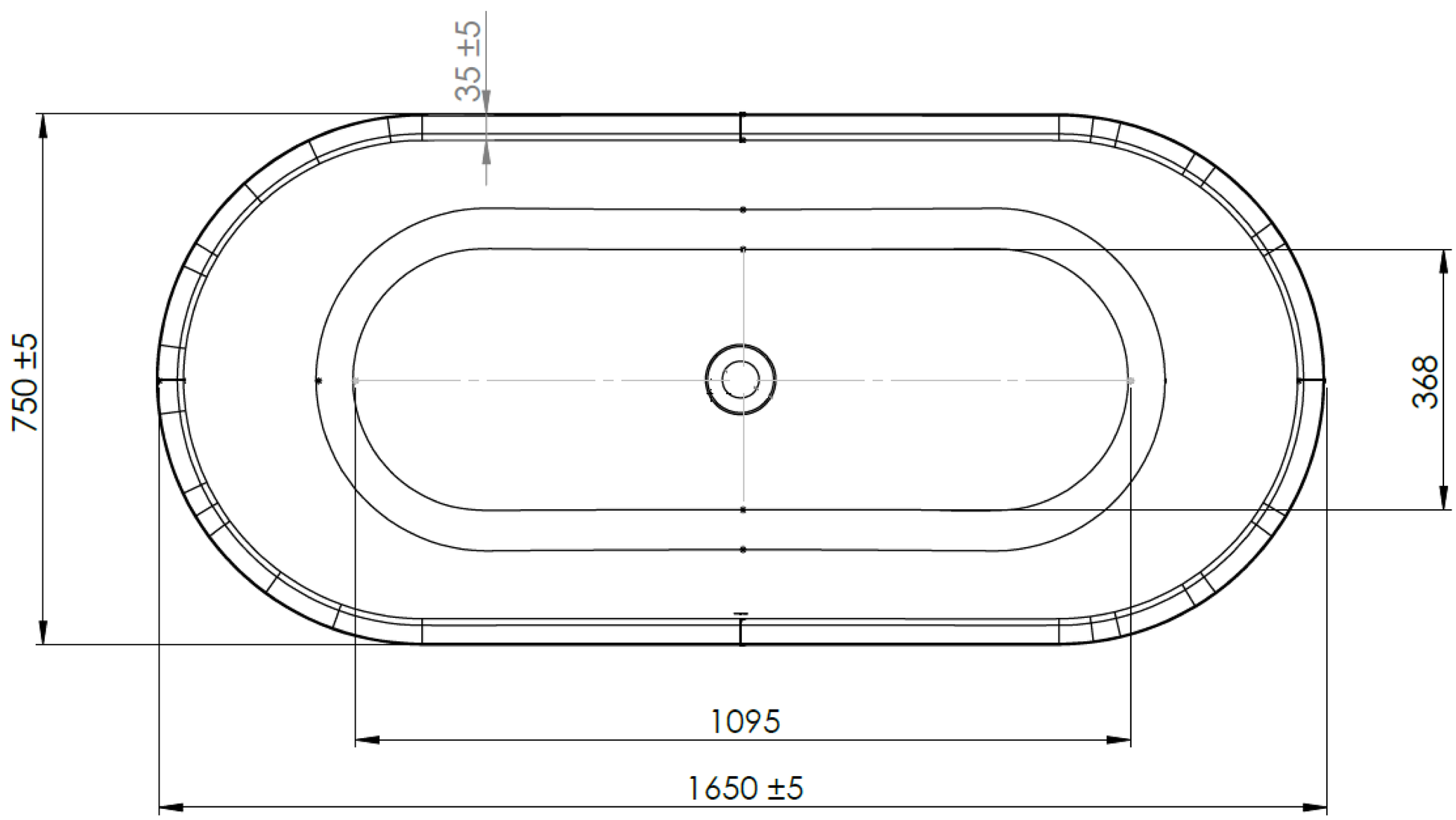
35 ±5
750 ±5
368
1095
1650 ±5