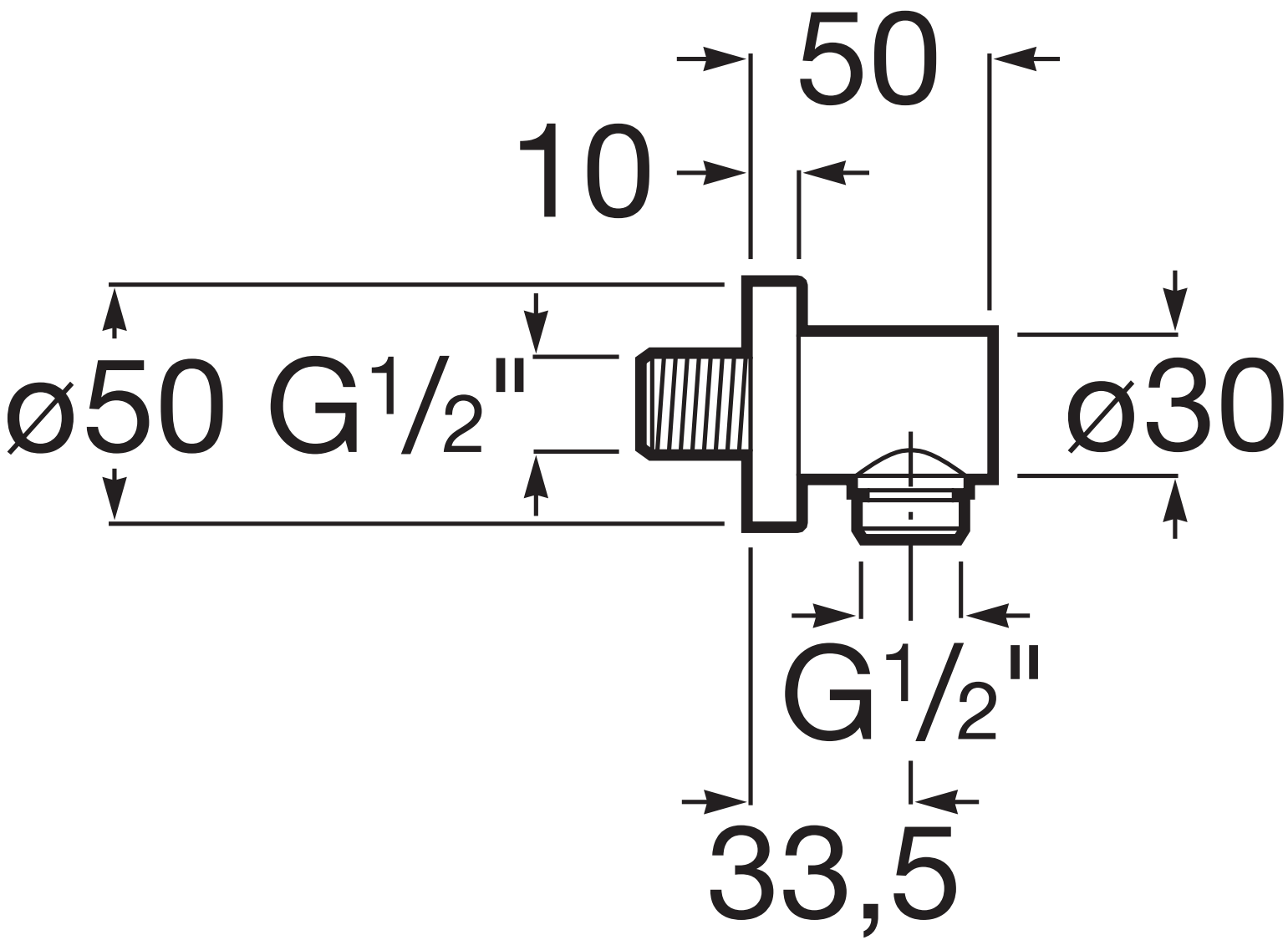
50
10
ø50 G1/2"
ø30
G1/2"
33,5